ACTIVE SUBWOOFER
XLf 8A

1 061 610 800 001

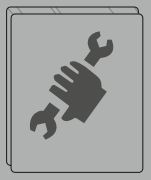

www.blaupunkt.com

BLAUPUNKT

ENGLISH

Introduction

Please read these operating instructions before using the equipment for the first time.

We provide a manufacturer's warranty for products bought within the European Union. For devices purchased outside the European Union, the warranty terms issued by our respective responsible domestic agency are valid. The warranty terms can be found at **www.blaupunkt.com**.

Safety Notes

Please observe the following safety notes during the installation and connection.

- Disconnect the negative terminal of the battery! Observe the safety notes of the vehicle manufacturer.
- When you drill holes, ensure that you do not damage any vehicle components.
- If the positive and negative cable are extended, ensure that the cross section is not less than 2.5 mm².
- Incorrect installation can result in malfunction of the electronic vehicle systems or your car audio system.

Installation and connection instructions

With respect to accident safety, the XLf 8A must be secured in a professional way.

When selecting the installation location, select a dry location that offers sufficient air circulation for cooling the amplifier.

The XLf 8A must not be installed on rear shelves, rear seats or other locations that are open to the front.

The installation location must be suitable to accept the accompanying mounting hardware and provide a firm support (see page 4 / Fig. 1).

The amplifier power cable must be fitted with a fuse no more than 30 cm from the battery to protect the vehicle battery in case of a short circuit. The fuse of the amplifier protects only the amplifier, not the vehicle battery.

Connection (see page 5 / Fig. 2)

1 10 A fuse
2 Preamplifier inputs
3 Power-on indicator (Protect/ Power)
4 Input sensitivity
5 Upper cut-off frequency
6 Phase position
7 Connector cable
8 Right loudspeaker input
9 Left loudspeaker input
10 - Earth / Ground
11 + Battery

Voltage supply

- We recommend a minimum cross section of 2.5 mm².
- Route commercially available positive cables to the battery and connect via fuse holder.
- Use cable glands for holes with sharp edges.
- Securely fasten commercially available negative cables to a noise-free earth point (chassis screw, chassis metal) (not to the negative terminal of the battery).
- Scrape the contact surfaces of the ground point until they are bright and grease with graphite grease.

Connection ⑪ is connected to the positive terminal of the battery & connection ⑩ to negative vehicle ground. The control of the XLf 8A should ideally be a two-channel control either via the pre-amplifier outputs or the loudspeaker outputs of the car sound system. A control solely via the right or left channel is also possible since the low-frequency portion of the music is generally identical on both channels.

Integrated fuse

The fuse integrated in the amplifier protects the output stage and the entire electrical system in case of a malfunction. If a replacement fuse is used, never bridge fuses or replace them with a type with higher current rating.

Audio inputs

You can select between 2 different audio inputs;

- Cinch (RCA)
- Hi level (loudspeaker connections)

Use only one of the audio inputs; otherwise, it may lead to audio interferences.

The preamplifier outputs are connected to the cinch (RCA) sockets ② of the subwoofer box via a shielded sound cable.

With control via the loudspeaker outputs, the input connections of pos. ⑧/⑨ are fed to the closest loudspeaker cables (front or rear) on the left and right. They are separated and connected to the input connections. The polarity of the + or – connections must be observed. Bridge output stages (BTL) can also be connected directly without an additional adapter.

Switching on/off

A special feature of the XLf 8A is its automatic switch-on:

The subwoofer automatically switches on if a music signal is received. If no music signal is received for more than 60 seconds, the XLf 8A automatically switches off.

VOL control

The VOL control ④ is used to adjust the input sensitivity of the power amplifier to the output voltage of your car sound system preamplifier output.

The adjustment range is from 0.1 V to 9.0 V.

If a car sound system of a third party manufacturer is connected, the input sensitivity must be adjusted corresponding to the manufacturer data.

A few important notes:
By turning the control clockwise, the input sensitivity of the amplifier and, therefore, also the volume increases. However, this is not a volume control; no further amplifier output can be achieved in the end position, even if it may sound like that at the beginning. The system merely increases the volume faster if the volume control of the car sound system is turned up.

CROSSOVER frequency control

The CROSSOVER control ⑤ allows setting the desired exit frequency band in this base, 20 Hz - 80 Hz is the ideal frequency band.

Example:
At a setting of 150 Hz, the amplifier has a frequency range of 20 Hz to 150 Hz. We suggest a setting of 80 Hz.

Settings

The following control setting is recommended as basic setting before putting the device into operation: Sensitivity (GAIN) Pos.④to minimum, PHASE Pos.⑥to 0°, x-over Pos.⑤to approx. 80 Hz. Switch on the device and select a musical piece with distinctive bass playback.

Increase the volume of your car sound system to the desired volume level. Now slowly increase the VOL control④until you can hear a clear amplification of the bass level. Next, use the CROSSOVER control⑤to select a filter setting that provides a well-contoured bass. You may have to alternately optimise the sensitivity setting④and the filter setting ⑤ .

The phase switch⑥must be set so that the bass is integrated into the acoustic pattern as best as possible and not recognisable as an individual source.

Also check your settings of the XLf 8A with the bass control fully open and, if necessary, with activated loudness. An overloading of the subwoofer box by selecting an excessive amplification Pos.④results in a distorted playback and can damage the loudspeaker.

Power-on indicator (PRT/PWR)

Green LED:
Output stage on, regular operating status.

Red LED:
Output stage is electronically switched off due to an error.

Recycling and disposal

Please use the return and collection systems available to dispose of the product.

Subject to changes!

Fig. 1:

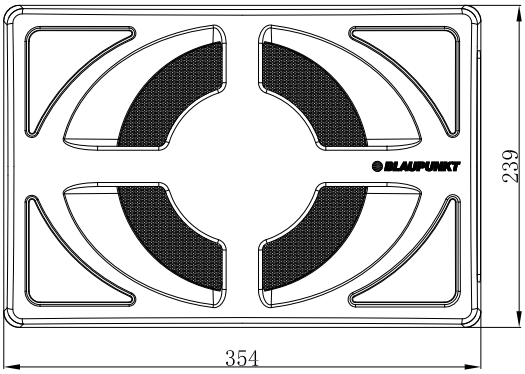

Wiring diagram

Fig. 2:

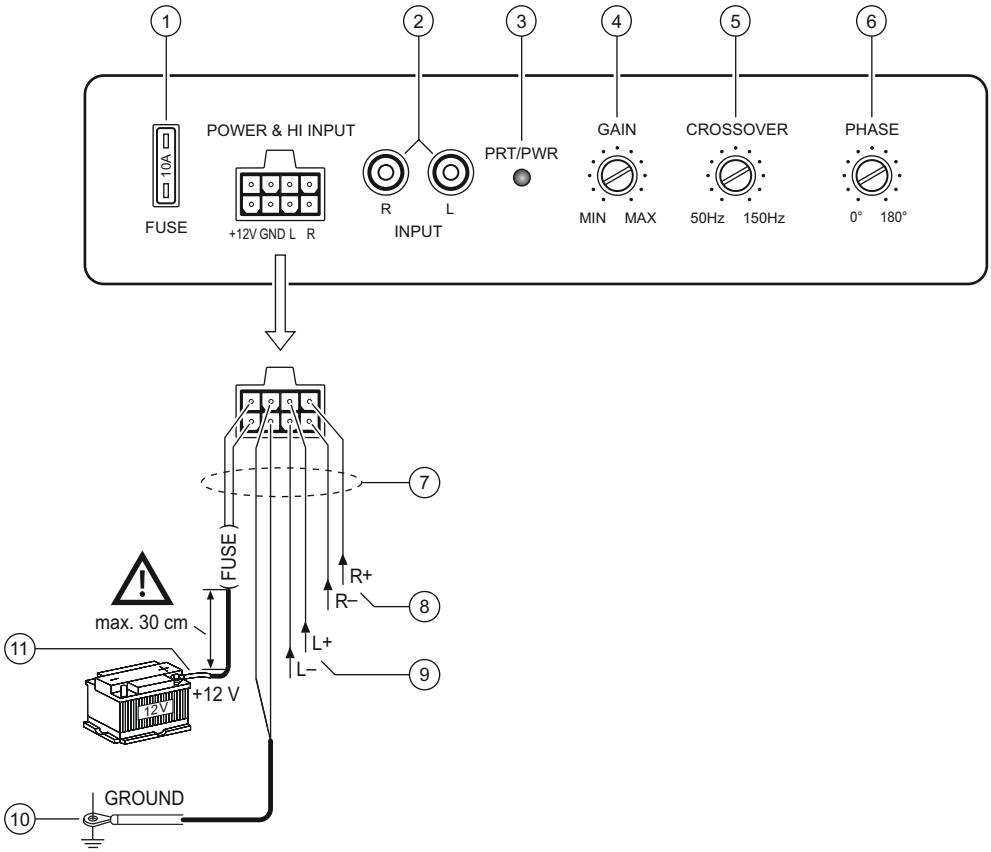

Technical Data

Amplifier	
Max Power	320 W
RMS Power @ 14.4 V	160 W
I max/min	10 A / < 1.5 mA
Phase	0° / 180°
Frequency response	20 - 150 Hz
Low pass filter	50 - 150 Hz
Gain (Cinch/RCA)	0.1 V - 9.0 V
Gain (High Level Input)	0.75 V - 7.5 V
Loudspeaker	
System	Active Subwoofer Enclosure
Cone size	200 mm (8")
Cone material	Aluminum Compound
Subwoofer box	
Size (WxHxD)	340 x 225 x 91 mm
Weight	approx. 4.3 kg

Blaupunkt India Private Limited
47, Atlanta Society, Nariman Point
Mumbai- 400 021. India.
www.blaupunkt.com

01/17

1 061 610 800 001

CE