BLAUPUNKT

DIGITAL VIDEO RECORDER

BP 4.0 - FHD

2" IPS Display | Dual Lens | Motion Detection

Enjoy it.

Product specifications and appearance subject to change without notice

CAUTION

- Set correct time in System Menu before first use.
- Please insert a mSD card in the right direction to avoid damage to the card slot in the DVR. If DVR shows error message, please format the mSD card from DVR menu. Please reset DVR or change mSD card if similar error occurs.
- **Note:** All files will be deleted when formatting mSD card, please backup Important files before formatting the mSD card. When reset function is selected, the settings will return to default setting.
- **It is recommended to use mSD card CLASS 10 or above. Not all mSD cards behave the same as their specifications may vary. Please test mSD compatibility before purchasing mSD card.**
- It is recommended to backup important file recoridngs once a week to avoid files being overwritten. Please format mSD card once every month for recording stability.
- The last file will be lost if the mSD card is removed from DVR while in ON condition or if the power to the DVR is interrupted.
- Please ensure the provided holder (mounting bracket) is installed correctly and firmly on windscreen to avoid damage to DVR.
- Battery life-span will decrease with usage. Please charge battery once every month to preserve battery in the event the device is not used for long period.
- Please do not use DVR in wet or damp environment as this DVR is not waterproof/water resistant.
- Please do not record or take pictures directly facing sunlight.
- To obtain clear image, please clean windscreen and DVR lens regularly. Avoid using DVR in a dusty environment.
- Please handle DVR with care and avoid direct impact to the DVR. Also, this DVR may malfunction when used in a high electromagnetic environment.
- Operating temperature of DVR is -10° C to 65° C, storage temperature Is -20°C to 70°C. Continuous exposure to sunlight, especially when closed in-cabin temperatures can exceed 70°C This may cause the DVR to malfunction, change color, cause housing & image distortion.

Disclaimer

- In no event shall Blaupunkt be liable for any direct, indirect, punitive, incidental, special consequential danger, to property or life, improper storage, whatsoever arising out of or connected with the use or misuse of their products.
- This device is NOT intended to be used for Illegal surveillance purposes and shall not be used in any form as evidence for claim purpose.
- Some countries prohibit drivers from mounting anything on the windshield, or restrict mounting of DVR's to specific areas of the windshield. It is the owner's responsibility to mount the DVR in compliance with local laws.
- Error messages may appear depending on the environment it is used in and in when there's low battery voltage in the vehicle.
- Blaupunkt is not liable/responsible for non-recording of events, missing files, etc.

Structure

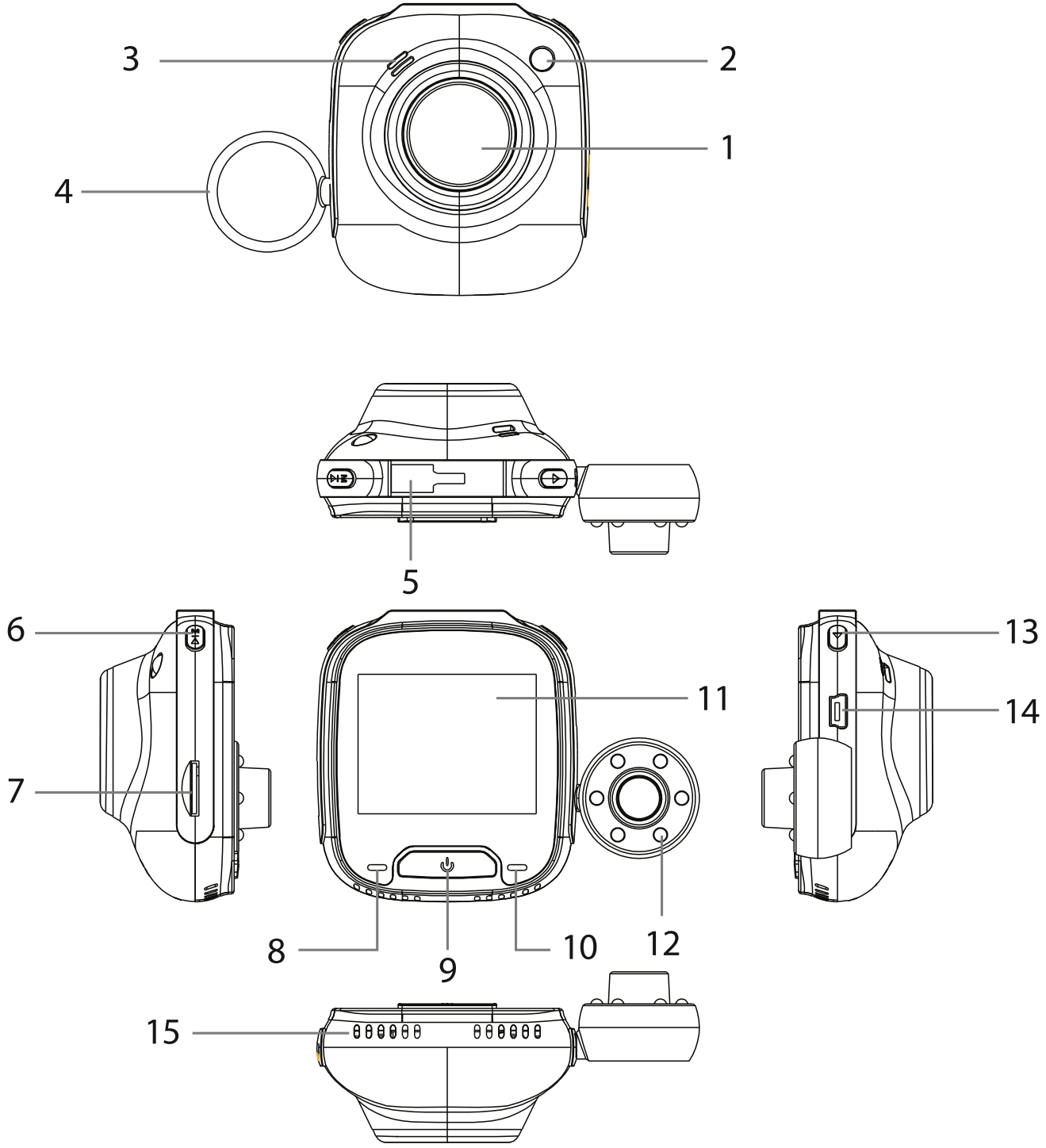

1. Front Lens
2. Fill Light
3. Speaker
4. In-cabin Lens
5. Holder Socket
6. UP/MENU Key
7. Micro SD Card Slot
8. Charging Indicator Light
9. Power/OK/REC Key
10. Recording Indicator Light
11. IPS Screen
12. IR Light
13. DOWN/MODE Key
14. USB Power Port
15. Internal Heat Dissipation provision

Operation

Mode	Number	Icon	Key	Action
Video Mode	9	⏻	Power/OK/REC Key	Long press to power ON/OFF; Short press to start/pause recording
	6	M/△	UP/MENU Key	Long press to enter video menu setting, short press to switch between front and in-cabin lens
	13	▽	DOWN/MODE Key	Long press to select from Video Mode/Photo Mode/Playback mode; Short press to turn ON / OFF audio recording
Photo Mode	9	⏻	Power/OK/REC Key	Long press to power ON/OFF
	6	M/△	UP/MENU Key	Long press to choose Photo mode. Short press to take pictures
	13	▽	DOWN/MODE Key	Long press to switch among Video Mode/Photo Mode/Playback mode
Playback Mode	9	⏻	Power/OK/REC Key	Long press to switch among DCIMA, DCIMB and LOCKFILE folders; Short press to play/pause file
	6	M/△	UP/MENU Key	Long press to enter playback menu setting, Short press to go to the previous file
	13	▽	DOWN/MODE Key	Long press to switch among Video Mode/Photo Mode/Playback mode, Short press to go to the next file
Menu Setting	9	⏻	Power/OK/REC Key	Long press to power ON / OFF, Short press to confirm
	6	M/△	UP/MENU Key	Long press to enter/exit menu setting, Short press to go to the previous item
	13	▽	DOWN/MODE Key	Long press to switch among Video Mode/Photo Mode/Playback mode, Short press to go to the next item

Note: Please note all actions take effect only when the DVR in standby mode.

Function

Key Features

1. Zinc alloy metal housing
2. 2.0' IPS screen with better display quality
3. Full HD 1080P recording (front camera)
4. Detachable HD 720P in-cabin lens with plug and play design
5. Photo capture, Playback, Automatic Recording with ignition turn on
6. Supports G-sensor, motion detection, loop recording
7. Car number display In the video
8. Supports parking monitoring
9. Support night vision with 6pcs IR lights
10. CE & ROHS certified

A. On/Off

1. Power ON

Long press ⏻ Power key to switch ON DVR and enter video mode. Short press the same key to start recording. When the DVR is connected to the 12V charger in the vehicle, it will AUTO commence recording when the ignition is turned ON. Once the ignition is turned OFF the DVR will automatically save the last file and shut down.

Note: Upon turn ON, the display screen will show 'PLEASE INSERT SD CARD' in case a mSD card is not inserted. Please insert mSD card once the DVR is in OFF condition

2. Power Off

Long press ⏻ the power key to switch OFF DVR while it is in either STANDBY or ON mode.

Note: When the built-in battery is close to being drained out, the DVR display will show a 'Low Battery' warning and switch OFF. It automatically saves the last file before it shuts down.

B. Battery Charging

With 12V car charger (provided)

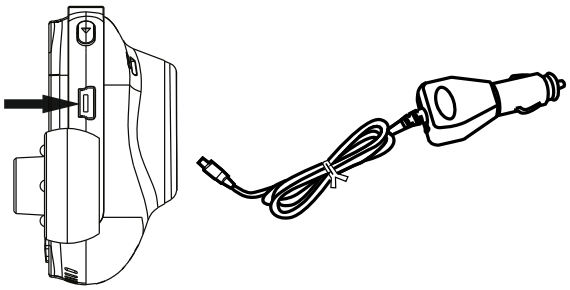

Note: While the DVR is plugged in to the 12V Charger, the charging indicator will glow a steady RED. Once it is fully charged, the charging indicator will switch OFF.

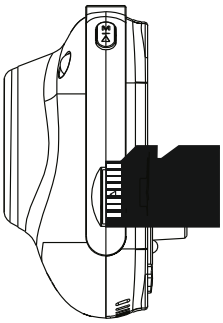

C. Inserting mSD Card

It is recommended that while inserting the mSD card into the provided slot, no force is to be applied. Once it is determined that the mSD card has been inserted the correct side, we suggest that the card be pushed down till it locks into position in the slot.

Removing mSD card: Briefly push down on the top of the mSD card until it is released from it's locked position and then pull it out (It is suggested to remove the mSD card when the DVR is in OFF mode)

D.Video

Power ON DVR to enter into video mode, it starts to record with two cameras automatically. The Blue indicator blinks when connected to the 12V car charger. Press ⏻ OK/REC key to stop recording and save the last file. The DVR goes into standby mode with the recording indicator light glowing a steady blue. In standby mode, short press ⏻ OK/REC key to restart recording.

In video mode, short press ▽ DOWN/MODE key to turn ON / OFF sound recording. Check icons displayed on the screen. Long press M/△ UP/MENU key to go to video settings.

Note: Please make sure in-cabin lens is aligned correctly to record in-cabin video as shown below. If the lens is facing the windshield or any other directions, the image will appear upside down.

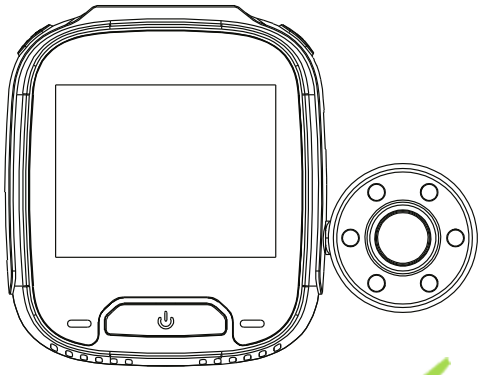

in-cabin lens facing in

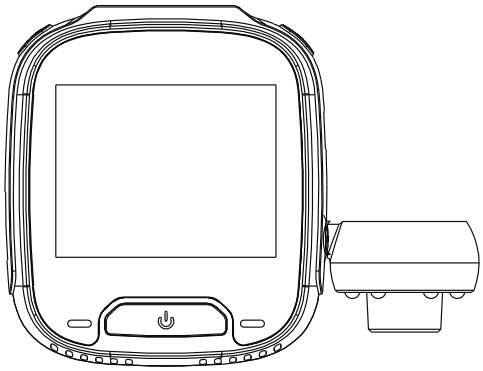

in-cabin lens facing down

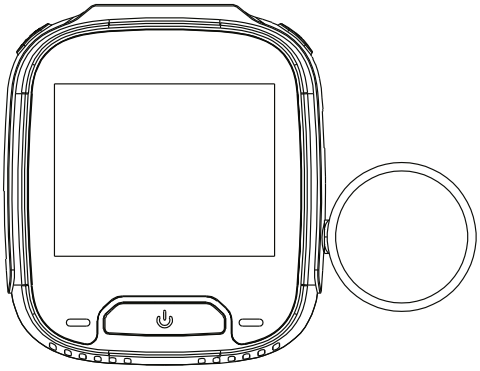

in-cabin lens facing towards windshield

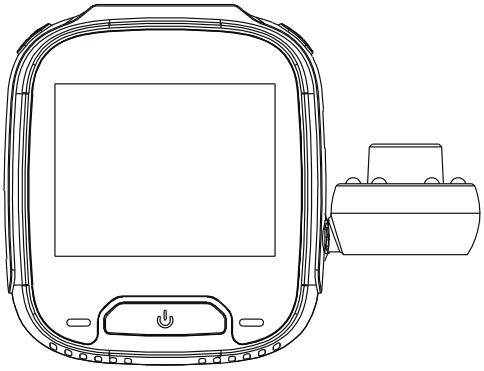

in-cabin lens facing up

E. Photo

In Standby mode, long press ▽ DOWN/MODE key to enter into photo mode. Short press ⏻ OK/REC key to take photos with front lens and shutter sound. Short press M/△ UP/MENU key to switch to in-cabin lens to take photos.

In photo mode, long press M/△ UP/MENU key to go to photo settings.

F. Playback and Delete

In video Standby mode, long press ▽ DOWN/MODE key twice to enter into playback mode. Short press M/△ UP/MENU and ▽ DOWN/MODE key to select the file and then press ⏻ OK/REC key to start or pause playback. Long press ⏻ OK/REC key to switch among DCIMA, DCIMB and LOCKFILE folders to view videos and photos. If you want to delete a file, long press M/△ UP/MENU key to enter into the menu. Select from File delete, Protect and Slideshow options. Long press M/△ UP/MENU key to go back to previous menu.

Note:

Please Long press ▽ DOWN/MODE key to exit Playback mode first and then long press ⏻ Power key if you want to switch off DVR while In Playback mode. Protect will lock/unlock a file manually. Once the file Is locked, It won't be overwritten In loop recording and can only be deleted manually.

G. Switching between Front and In-cabin Lens

In video and photo standby mode, short press M/△ UP/MENU key to switch between front and in-cabin lens. Available options are Front lens full screen display, in-cabin lens full screen display, picture-in-picture and half & half display.

H. G-Sensor

In case of emergency braking or a collision, the G-sensor will be activated to save and protect the current video clip from being overwritten automatically and will be shown with a key and G-sensor icon that appears at the top middle of the screen. Three setting options are available (High, Medium & Low). Medium is recommended.

I. Motion Detection

In video standby mode, long press M/△ UP/MENU key to go to the video menu and turn on motion detection. When DVR detects a moving object, it starts to record automatically. If there is no movement in front of the front lens for 20 seconds, DVR will stop recording automatically and go into Standby mode until movement is detected.

When motion detection ON is selected, the icon is displayed on the screen. Short press ⏻ OK / REC key while in recording mode to turn OFF motion detection.

J. Parking Monitoring

Parking monitor is for security monitoring while the vehicle is parked.

Once Parking Monitoring ON is selected in the video menu the screen will display the icon . Once the vehicle ignition is turned OFF, the DVR will power OFF. In case the DVR detects any vibration, it will power ON to record for 30 seconds automatically with a key icon displayed at the top middle of the screen and then power OFF. If there is continuous vibration, DVR will turn on again to record for 30 seconds until the built-in battery is drained completely. All videos created in Parking Monitoring mode without external power supply will be available in the

LOCKFILE folder in the m5D card and not overwritten while the DVR is in loop recording.
If Parking Monitoring option is kept ON while the vehicle ignition is ON and the car charger provides power, only the first video file will be locked.

K. Car Number Display

Long press M/△ UP/MENU key to set Vehicle Number Display ON in the video menu. There are a total of 10 digits that can be entered. Select ▽ DOWN/MODE key to enter numeric information '0-9' and 'A-Z' for every digit. Once the correct information is entered, press ⏻ OK/REC key to go to next digit and long press M/△ UP/MENU key to exit settings.

Note: If Date Stamp is set to OFF, vehicle number will not display on the screen and video even if Vehicle Number is set to ON.

System Menu

In Standby mode, long press M UP / MENU key twice to enter into system menu. Press M UP / MENU key and ▽ DOWN / MODE key to select the item and press ⏻ OK / REC to confirm. Long press M UP / MENU key again to exit

	Mode	Category	Sub-Category	Default
Menu	Video Mode	Resolution	1296P 2304X1296 1080P 1920X1080 720P 1280x720 VGA 640x480	1080P 1920X1080 (front lens) 720P 1280x720 (in-cabin lens)
		Loop Recording	Off/1min / 3mins/5mins	1min
		HDR	Off/On	Off
		Motion Detection	Off/On	Off
		Audio Record	Off/On	On
		Date Stamp	Off/On	On
		G-sensor	Off/Low/Medium/High	Medium
		Parking Monitoring	Off/Low/Medium/High	Off
		Car Number	A-Z, 0-9	
		Car Number Display	Off/On	Off
	Photo Mode	Capture Mode	Single/2s /5s /10s timer	Single
		Resolution	12/10/8/5/3/2/1M/VGA	12M
		Burst	Off/On	Off
		Quality	Fine/Normal/Economy	Fine
		Sharpness	Strong/Normal/Soft	Normal
		White Balance	Auto/Daylight/Cloudy/Tungsten/ Fluorescent	Auto
		Color	Color/Black&White/Sepia	Color
		ISO	Auto1100/200/400	Auto
		Exposure	-3~+3	0
		Steady Shot	Off/On	On
		Quick Preview	Off / 2sec / 5sec	Off
		Date Stamp	Off/On	On
	Playback	Delete	M Delete Current/Delete All	
		Protection	Lock Current / Unlock Current / Lock All / unlock All	
		Slideshow	2sec/5sec/8sec	2sec

	Mode	Category	Sub-Category	Default
Menu	System Menu	LCD OFF	Off/30sec/1 minl2mlns	Off
		Auto Power Off	Off/3mins/5mins/10mins	Off
		Frequency	50HZ / 60HZ	50HZ
		Beep Sound	Off/On	On
		Language	English	English
		Date/Time	DD/MM/YYYY	DD/MM/YYYY
		Fill Light	Off/On/Auto	Off
		Format	cancel / ok	
		Default Setting	cancel / ok	
		Version	Current Software Version	

Mass Storage

Video / Photo Download

The Red power indicator and Blue recording indicator will light up the device is connected to the computer via USB cable. Once the device is connected to a computer, device's screen will prompt two options for usage selection - **Mass Storage** and **REC Mode.**

Mass Storage

- The screen will turn blank with U DISK Icon when Mass Storage is selected. Device will allow computer to access files in mSD storage.
- There are three folders options in mSD card - DCIMA, DC and LOCKFILE
- DCIMA is the file folder for videos from the front lens
- DCIMB is the file folder for videos from in-cabin lens
- LOCKFILE is the file folder for locked videos created by G-sensor and Parking Monitoring

REC MODE

Device will work normally when REC Mode is selected. Video recording and photo capture are available In this mode.

Cabling Diagram

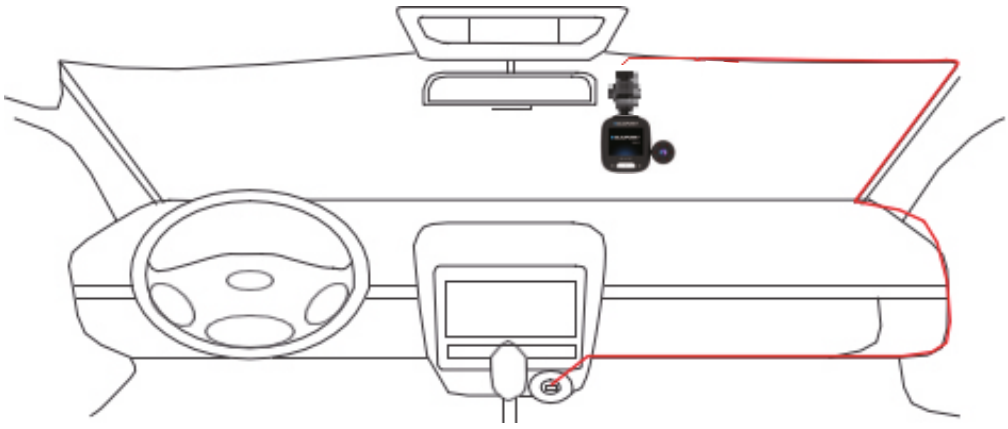

Product Specification

Specification are subject to change due to continuous improvement and no prior notice will be given.

Sub-Category	Default
Screen Size	2.0' HD IPS screen
Viewing Angle	140° diagonal ultra wide viewing angle (front lens) 100° diagonal wide viewing angle(in-cabin lens)
Video Resolution	1296P 2304 X 1296 / 1080P 1920 X 1080 / 720P 1280 x 720P / VGA 640x480 (front lens) / 720P 1280 x 720 (in-cabin lens)
Image Resolution	12M/10M/8M/5M/3M/2M/1M/VGA
Video Format	MOV/H264
Image Format	JPG
Memory Card	Max. 32GB mSD Card (Class 10 and above)
Frequency	50HZ/60HZ
Power Port	USB 5V/1.5A
Battery Capacity	300mAH
Microphone/Speaker	Built-in
Loop Recording	Off/1min/3mins/5mins
LCD Off / Audio Record / Date Stamp / G-Sensor / Motion Detection / Parking Monitoring / Car Number Display	Support
Language	English
DVR N.W	92g
DVR Size	58(W)X65(H)X33(D)mm

Package Content

1xDVR
1xin-cabin lens
1xholder
1xuser manual
1xcharger connector cable
1xwarranty card

Trouble Shooting

Q1. DVR does not power ON

A. Please make sure if DVR Is properly connected to the car charger. Since the built-in battery Is only to save the last file In case of emergency, powering ON with the 12V car charger is suggested. It is recommended to ONLY use the 12V car charger that comes with the device, do NOT use a standard vehicle USB port.

B. Reset DVR to default settings.

Q2. Stops recording or "Card Full" Error Massage

A. CLASS 10 or above mSD card is recommended. mSD card specification varies from one brand to another, some may not function as expected when used with this DVR. Please test for mSD compatibility before purchasing.

B. Usually caused by too many "locked" flies. Go to settings, select Format, delete all data. If road conditions are too bumpy, this many also cause too many locked flies on the mSD card, in this case lower the G-Sensor sensitivity to Low.

C. Reset the device.

Q3. 'No Card' Error Massage

A. Please confirm that the mSD Card is inserted correctly and secured in its location. If not, the mSD card is most likely inserted wrong.

B. Format mSD card (located in settings).

Q4. Date & Time are incorrect

A. Reset the date and time in the System Menu. If the internal battery is drained completly, then the device needs to be fully charged and the date/time will need to be re entered.

Q5. Blurry video or picture or horizontal stripe interference on image

A. Make sure all protective adhesive is off the lens and screen.

B. Please clean the lens with soft cotton cloth and don't touch the lens. Ensure there is no dirt or fingerprints on the lens

C. Set the correct Frequency in System Menu.

D. The quality of video and pictures will be affected in case front lighting and / or backlighting environment.

Q6. Battery only last 10 minutes or less

A. This is normal, the built-in battery is designed to save footage when the unit loses power.

Q7. The LCD shuts off when I'm driving

A. Go to System Menu to check if LCD OFF set On. If yes, please set it OFF.

Q8. The device has frozen after quick-operating press
A. Please reset device.

Q9. The device has frozen/stopped working after recording for a while
A. Check If the mSD card was formatted in the device (located In settings) before first use.
B. It is recommended that you reset the device if it remains in "FREEZE" mode
C. Check the speed of the mSD card. class 10 or higher is recommended for the highest data transfer, especially If the file sizes are large.

Q10. I get an error massage "Picture error while attempting to play back a file
A. There may be some corrupt data sectors on the mSD card, please format the SD card using the Format option in System Menu.

Q11. Can't play back files(.mov and jpg)
A. The computer does not have the proper codec to play this file. Upgrade your Windows Media Player, QuIck TIme Player etc.

Q12. My video/pictures of an incident are NOT there
A. Check if the capacity of mSD card is filled with many "locked" files and hence there is not enough memory to record. Go to settings, Format ,delete all data.
B. The files may have been overwritten in a record cycle (loop recording).

Q13. The device is not turning ON
A. Let the device remain plugged in to the 12V charging connector for about 10 minutes, sometimes due to storage and delivery, the battery may be completely drained, this is normal.

Q14. No voice in the video, no keypad tone, no G-Sensor, and no date and time
A. Please select "Factory Default" in the System Menu.

BLAUPUNKT

Blaupunkt India Private Limited
47, Atlanta Society, Nariman Point, Mumbai - 400 021. Maharashtra. India.
Toll Free: 1800 209 6820 | info@blaupunktcar.in | Shop Online at www.blaupunktcar.in