Blaupunkt India Private Limited
47, Atlanta Society, Nariman Point
Mumbai- 400 021. India.
Toll Free: 1800 209 6820
info@blaupunkt.in | www.blaupunkt.com

BLAUPUNKT

Sound | 2-Way Coaxial System

Vx 692

Enjoy it.

INTRODUCTION

We provide a manufacturer warranty for our products bought within the European Union. You can view the warranty conditions at www.blaupunkt.com or ask for them directly at:
Blaupunkt India Private Limited
47, Atlanta Society, Nariman Point, Mumbai - 400 021. India.

SAFETY CONSIDERATIONS

Installation and installation instructions
Prior to drilling the mounting holes, make sure that no cables and parts of the vehicle will be damaged. Leave ample clearance between the cables and other harnesses. Use the enclosed cable ducts at sharp edged holes.

Recycling and disposal

To dispose of the product, please use the available waste return and collection systems.

Subject to changes!

Installation

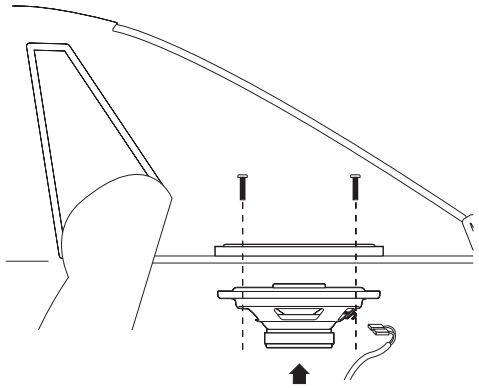

Specifications

Peak power handling	320 Watt
RMS power handling	80 Watt
Impedance	3 ohms
Frequency response	30-25.000 Hz
Sensitivity	92 dB (2.83 V/m)

Crossover Network

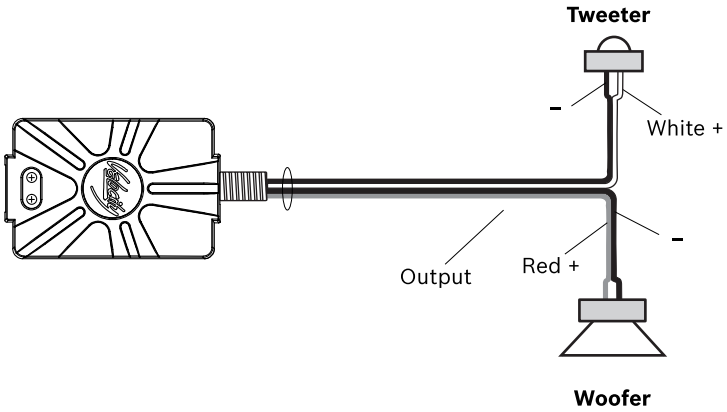
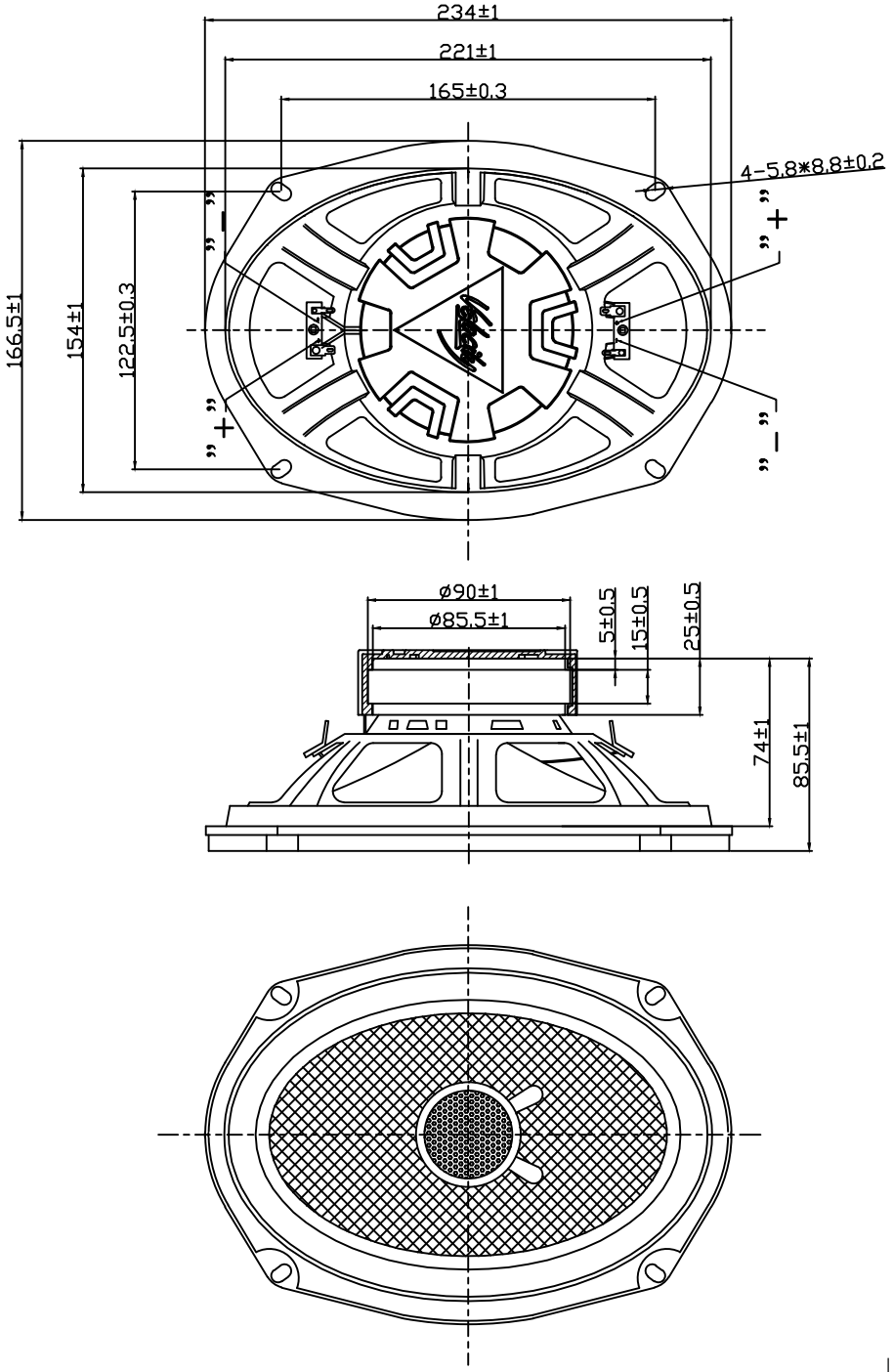
Installation