Blaupunkt India Private Limited
47, Atlanta Society, Nariman Point
Mumbai- 400 021. Maharashtra. India.
Toll Free: 1800 209 6820
info@blaupunkt.in
www.blaupunkt.com

CE

BLAUPUNKT

4 Channel Amplifier

GTA 460

Enjoy it.

1051810460 001
8 906086 050392

Warranty

We provide manufacturer's warranty for 12 months from the date of sale for products purchased within India.

Recommendation

The performance of an amplifier can only be as good as its installation. Correct installation increases the overall performance of your car sound system. The GTA amplifier should be installed by a trained person. If you would like to install it yourself, please read these installation instructions very carefully and allow yourself sufficient time for the installation.

In conclusion, allow us a few words about the topic of health protection:

During the playback of music in your vehicle, please consider that continuous sound-pressure levels above 100 dB can lead to permanent damages to the human ear and even to loss of hearing. Using today's high-performance systems and loudspeaker configurations allows for reaching sound pressure levels above 130 dB.

Safety notes

Please observe the following safety notes during the installation and connection.

- Disconnect the negative terminal of the battery! Observe the safety notes of the vehicle manufacturer.
- When you drill holes, ensure that you do not damage any vehicle components.
- Please use minimum 10AWG power & ground cable with a fuse located within 18 inches of the battery.
- Use cable glands for holes with sharp edges.
- An incorrect installation can result in malfunctions of the electronic vehicle systems or sound system.

Installation & connection instructions

With respect to accident safety, the GTA 460 must be secured in a professional way.

When selecting the installation location, select a dry location that offers sufficient air circulation for cooling the amplifier.

The GTA 460 must not be installed on rear shelves, rear seats or other locations that are open to the front.

The installation location must be suitable to accept the accompanying screws and provide a firm support.

The amplifier power cable must be fitted with a fuse no more than 30 cm from the battery to protect the vehicle battery in case of a short circuit between power amplifier and battery. The fuse of the amplifier protects only the amplifier, not the vehicle battery.

Use loudspeakers with 2 - 4 Ohms impedance (see table or installation drawing). Do not connect loudspeakers to ground, use only the referenced terminals.

Application options and loudspeaker connection

4 Channel mode Max power	4 x 180 W / 4 Ω	Fig. 4, 5
Stereo mode Max power	2 x 360 W / 4 Ω	Fig. 6
4 Channel mode RMS power	4 x 60 W / 4 Ω	Fig. 4, 5
Stereo mode RMS power	2 x 180 W / 4 Ω	Fig. 6
4 Channel mode RMS power	4 x 90 W / 2 Ω	Fig. 4, 5
3 Channel mode RMS power	2 x 60 W / 4 Ω 1 x 180 W / 4 Ω	Fig. 5
Frequency response	10 Hz - 30,000 Hz	
Signal-to-noise ratio	> 85 dB @ RMS power	
Signal-to-noise ratio	> 75 dB @ 1 W / 1 kHz	
Distortion factor (RMS)	< 0.08 %	
Stability	2 Ω (4 Ω in bridge mode)	
Input sensitivity	0.2 - 8 V	
Low-pass filter (Low Pass)	50 - 250 Hz	
High-pass filter (High Pass)	80 Hz	
Bass boost	0 dB / 6 dB / 12 dB	
Dimensions W x H x D (mm) W x H x D (")	185 x 53 x 284.5 7.3 x 2.1 x 11.2	

Audio inputs (see Fig. 3)

You can select between 2 different audio inputs;
- Cinch (RCA)
- Hi level (loudspeaker connections)

Use only one of the audio inputs; otherwise, it may lead to audio interference.

The preamplifier outputs are connected to the cinch (RCA) sockets①) via a shielded sound cable.

With control via the loudspeaker outputs, the input connections of pos. ②/③ are fed to the closest loudspeaker cables (front or rear) on the left and right. They are separated and connected to the input connections. The polarity of the +or - connections must be observed. Bridge output stages (BTL) can also be connected directly without an additional adapter.

Positive / Negative connection

- We recommend a minimum cross section of 10 AWG
- Route commercially available positive cables to the battery and connect via fuse holder.
- Use cable glands for holes with sharp edges.

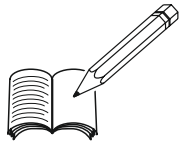

Installation

Fig. 5a

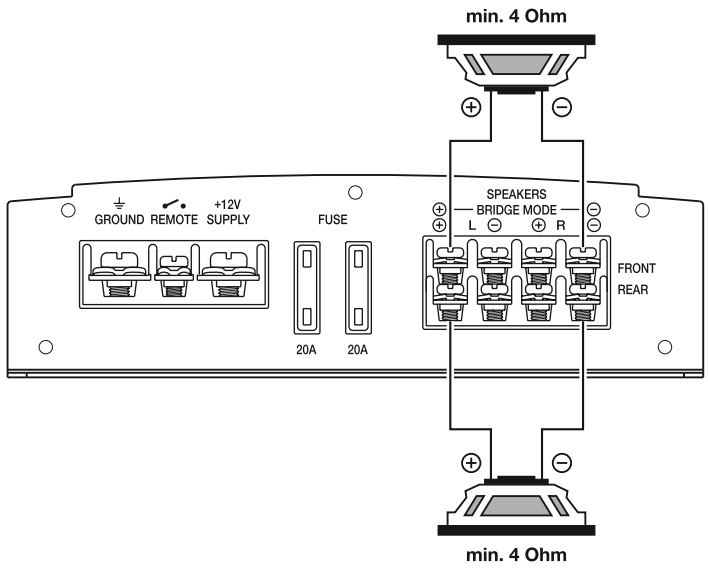

- Securely fasten commercially available negative cables to a noise-free ground point (chassis screw, chassis metal) not to the negative pole of the battery.
- Scrape the contact surfaces of the ground point until they are bright and grease with graphite grease.

Integrated fuses (Fuse)

The fuses integrated in the amplifier (Fuse) protect the power amplifier and the entire electrical system in case of an error. If a replacement fuse is used, never bridge fuses or replace them with a type with higher current.

Connection examples

Connection of the voltage supply.....Fig. 2
Audio inputs.....Fig. 3
Loudspeaker connections.....Fig. 4/5

+12V

Remote connection of the amplifier with switchable +12V voltage source.
This allows the amplifier to be switched on and off using the on/off-switch of the radio device.

Level control

The Level control is used to adjust the input sensitivity of the power amplifier to the output voltage of your car sound system preamplifier output.
The adjustment range is from 0.2 V to 10V.
If a car sound system of a third party manufacturer is connected, the input sensitivity must be adjusted corresponding to the manufacturer data.

An important explanations in this context:
By turning the control clockwise, the input sensitivity of the amplifier and, therefore, also the volume increases. However, this is not a volume control; no further amplifier output can be achieved in the full position, even if it may sound like that at the beginning. The system merely increases the volume faster if the volume control of the car sound system is turned up.

DC Offset - 4

When connecting to an OE radio, it may not be possible to connect the remote turn on lead on the amplifier, please use the high level input available on the side panel & turn on DC Offset to automatically turn on/off the amplifier when the OE radio is turned on / off.

Loudspeaker connections

As with every audio component, the correct polarity of amplifier and loudspeakers is important for a good bass response. For this reason, ensure that the positive (+) connection of the amplifier is connected with the positive connection (+) of the loudspeaker; the same applies to the negative (-) connections. In addition, the left amplifier channel must be connected with the left loudspeaker and the right amplifier channel with the right loudspeaker.

Bridged loudspeaker connections

The GTA amplifier can also be bridged for a mono configuration. In bridge mode, the amplifier combines the right and left channel to a single-channel output (mono output).

Caution:

In a bridge circuit, the amplifier load must be 4 ohm or higher. A lower load leads to overheating and cause the amplifier to switch off & can cause permanent damage.

Adjusting the type & range of the frequency crossovers

With the GTA 460, the type of frequency crossover (i.e. "Low Pass" or "Hi-Pass") and the desired frequency can be adjusted. For example, if a subwoofer is to be connected, the low-pass settings shown are required (Fig. 3). The frequency is dependent upon the frequency range of the loudspeakers (see recommended frequency range of the loudspeakers).

High-Pass - 80 Hz

At a setting of 80 Hz, the amplifier has a frequency range of 80 Hz to 30,000 Hz.

Low-pass frequency control

This control is active if the switch is in the position "Low-Pass", and allows for setting the desired entry frequency.

Example: At a setting of 120 Hz, the amplifier has a frequency range of 10 Hz to 120 Hz.

Bass boost

The bass boost control is used to adjust the bass response of the amplifier.

The setting options are: 0 dB / +6 dB / +12 dB.

Power-on indicator (PWR / PRO)

Green LED: Output stage on, regular operating status.
Red LED: Output stage is electronically switched off due to an error.

Recycling & Disposal

Please use the return and collection systems available to dispose of the product.

Subject to changes

Installation

Fig. 1

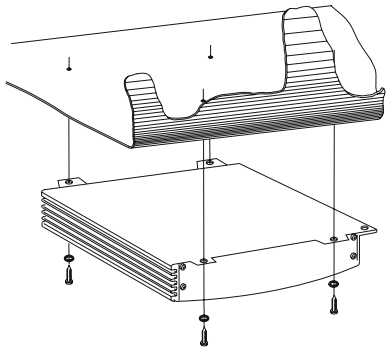

Fig. 2

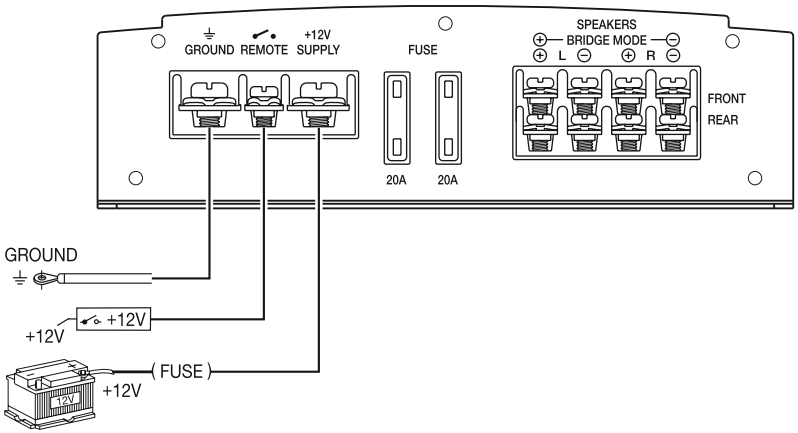

Fig. 3

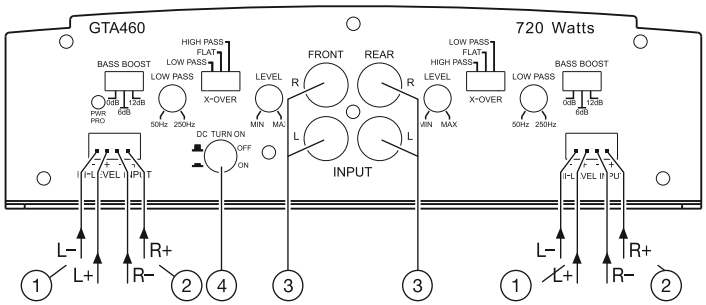

Installation

Fig. 4

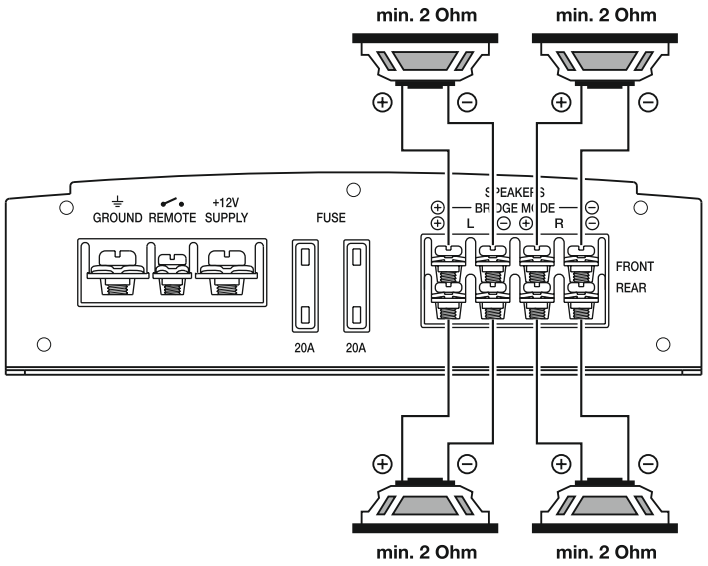
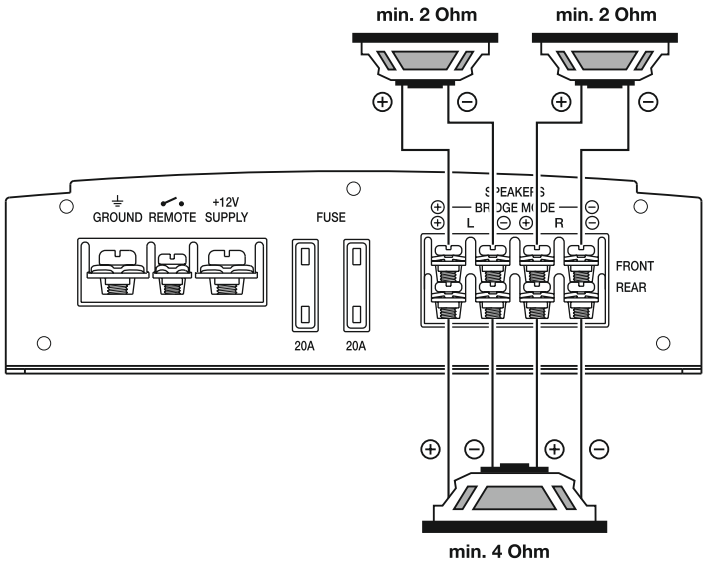
Fig. 5